M54700 Coordinator

Line Powered Coordinator

Overview

The H2O Degree M54700 Coordinator is a wireless device that forms, monitors and controls the radio mesh network at each multi-family property. It is the heart of the H2O Degree wireless radio network.

The coordinator installs easily with the H2O Degree gateway via a USB cable.

The coordinator manages data packet transmissions between the gateway and all radio devices integrated in the wireless mesh network.

Compatibility

☑ Wireless Water Meters
☑ Wireless Gas Meters
☑ Wireless Electric Meters
☑ Wireless BTU Meters
☑ Wireless Thermostat
☑ Wireless Relay

Features

- The H2O Degree M54700 is a coordinator. (One coordinator required per gateway)
- Applications include submetering, remote energy monitoring & management and leak detection in multi-family facilities.
- Wireless mesh network system is ideal for new or retrofit installation.
- Remote monitoring, and control of wireless devices attached to water, gas, electric and BTU meters.
- Device forms, monitors and controls the radio mesh network at each multi-family property.
- Interfaces gateway to wireless mesh network to receive data from radio devices installed on the network, and transmit commands back to devices installed on the network.
- Installs at gateway via USB cable.
- Coordinator software can be updated remotely.
- Radio is compatible with the H2O Degree secure wireless 2.4 GHz mesh network.
- LED power indicator.
- Health Packet reported (120 minute interval default).
- Five year warranty.

Ordering Information

Model	Description
M54700	Line Powered Coordinator (includes a USB cable to connect gateway)

12/2016

H2O Degree
3580 Progress Drive, Suite L
Bensalem, PA 19020

www.h2odegree.com
(215) 788-8485
info@h2odegree.com

M54700 Coordinator
Technical Specifications

Technical Specifications

Electrical
Voltage input 5 volt DC
Current input 45 milli-amps typical from USB cable, 250 milli-amp max

Regulatory approvals
US Complies with FCC CFR Part 15
European RADIO EN 300 328:v1.7.1
European EMC EN 301 489-17:V2.1.1
European SAFETY EN 60950-1:2005 (Ed. 2.0)

Radio
20 dBm output power
High sensitivity -106 dBm
16 channels (802.15.4 Channel 11 to 26)
Data rate 250 kilo bytes per second
2.4 GHz ISM band

Environmental
Operating temperature 0 to 30 degree C
Storage temperature -25 to 50 degrees C

Installation indicators
LED (green) indicates coordinator power

Physical
(H x W x D) 5.0 x 3.5 x 1.0625 inch
Color gray
Weight / shipping weight < 9 oz. / 1 lbs.

Warranty
Five Years

Wiring & Installation Information

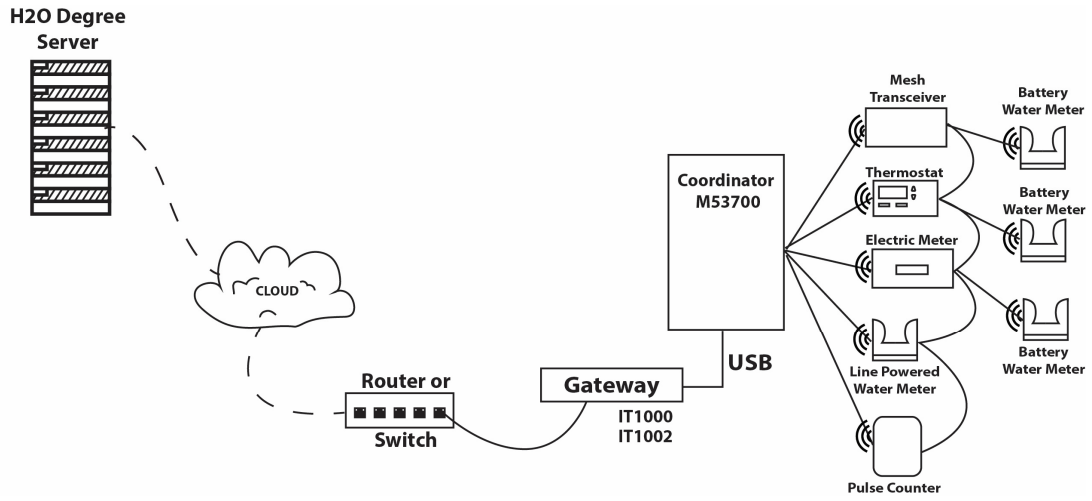

Ordering Information

Model	Description
M53400	Line Powered Coordinator (includes a USB cable to connect gateway)

12/2016

H2O Degree
3580 Progress Drive, Suite L
Bensalem, PA 19020

www.h2odegree.com
(215) 788-8485
info@h2odegree.com